CARE & MAINTENANCE

Clean with a soft cloth and warm soapy water as necessary - rinse and dry after cleaning. Under no circumstances should abrasive or acidbased cleaning products be used. If the mixer taprequires servicing, please contact your plumber (preferably the one who installed it). **If the problem represents a danger, or damage to property may occur, immediately shut off the water supply.** Most problems occur due to contaminated supply lines or water pressure exceeding 500 kPa. Unscrew and clean the spout aerator periodically - especially if you notice a drop in water pressure. Braided flexible hoses must be inspected every 12 months for warning signs of failure including bulging, rust spots,wear, moisture, snapped threads, kinking,water staining, general corrosion or discolouration. Mixer tails showing any signs of the above mentioned warning signs must be replaced immediately.

Neko Australia Pty Ltd
21 Lyell Street, Fyshwick, ACT 2609
sales@nekoaustralia.com.au

Installation Guide

Wall Mixer (Inwall Body & Trim Kit)





IMPORTANT

This mixer tap must be installed in accordance with these instructions.

Thoroughly inspect product, and if damaged, do not install but return to the place of purchase. This tap is manufactured to standard AS 3718. This product complies with the Australian Lead Free requirements of the National Construction Code Volume 3.

Please leave these instructions with the end user.

THIS MIXER TAP MUST BE INSTALLED BY A LICENSED PLUMBER IN ACCORDANCE WITH LOCAL REGULATIONS

CAUTION

Be sure to use proper tools and always wear personal safety devices for your protection during installation.

PRE-INSTALLATION INSTRUCTIONS

- Before performing any work involving mains water supply lines, ensure the water supply is shut off.
- This mixer tap is pre-assembled and tested. Do not disassemble, as this will void the warranty.
- During installation of aerators containing flow regulators, the aerator must be tightened with an aerator key to prevent removal by hand.
- Do not remove the cartridge from the tap body as it has been pressure tested and tightened to a specific torque. Product warranty does not apply where the ceramic cartridge has malfunctioned due to the presence in the water supply of copper tube pieces, sand, dirt or stones; thread tape; other objects not normally present in potable water supplies. Ensure lines are flushed prior to installation.
- If water pressure exceeds 500 kPa, a pressure reducing device must be installed to reduce the water pressure below 500 kPa. Note that water pressure overnight can reach 150% of the daytime pressure.

PRESSURES & TEMPERATURES

- Maximum Hydrostatic Pressure: 500kPa. NOTE: AS/NZS 3500.1 Subclause 3.3.4 (Maximum pressure within buildings) states "The maximum static pressure at any outlet, other than a fire service outlet, within a building shall not exceed 500 kPa. NOTE: Pressures above 500 kPa can cause damage from water hammer, reduced life of appliances, taps and fittings, and cause excessive noise in the system."
- Minimum Hydrostatic Pressure: 150 kPa. NOTE: This product may not be suitable for use with low pressure or gravity feed water supplies or with some continuous flow / instantaneous hot water systems.
- The maximum operating temperature for the mixer tap is 65°C.
- The recommended maximum delivery temperature is 50°C.

Issue Date 16/05/2025 Revision Number: V1.0

Installation Instructions

GENERAL NOTES

- This product is to be installed by a licensed plumber, installation must comply with the AS/NZS 3500 series of Standards, and all applicable local regulations and plumbing codes.
- **Please ensure that the lines are flushed prior to installation as contaminates in the water can damage the ceramic cartridge, flow regulator and also affect the performance of the mixer.**
- **After installation, all plumbing connections and tail hoses must be checked for leaks.**
- The Mixer is to only be cleaned with warm soapy water and a soft cloth.
- Under no circumstances should any abrasive, cream or acid based cleaning agents be used as these types of cleaners will damage the finish, cartridge, seals and aerators.

INSTALLATION

1 All pipework must be thoroughly flushed prior to installation, as foreign materials may block the flow.

2 Aerator insert housing must be retightened to prevent removal by hand.

3 Any flow controller incorporated in the outlet to be tightened to prevent removal by hand.

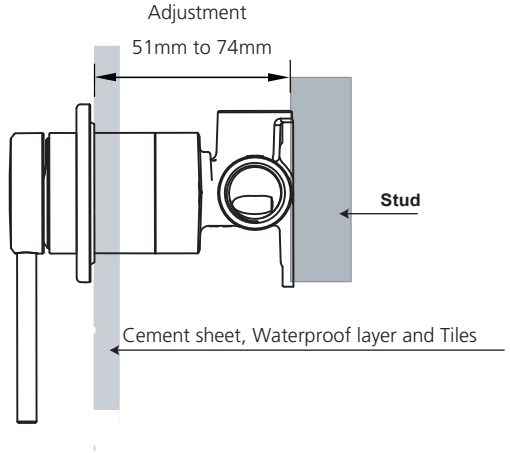

1

Screw the shower mixer set in place

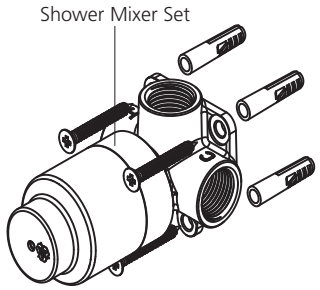

Do not remove the protective cover until final fit-off.

2

Attach water supply and water outlet
TEST AND CHECK FOR LEAKS



3

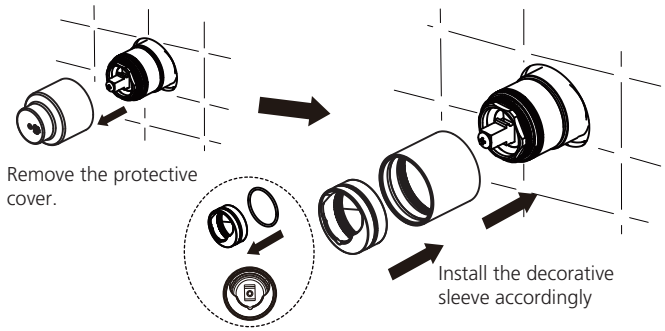

4

Push on the cover plate.

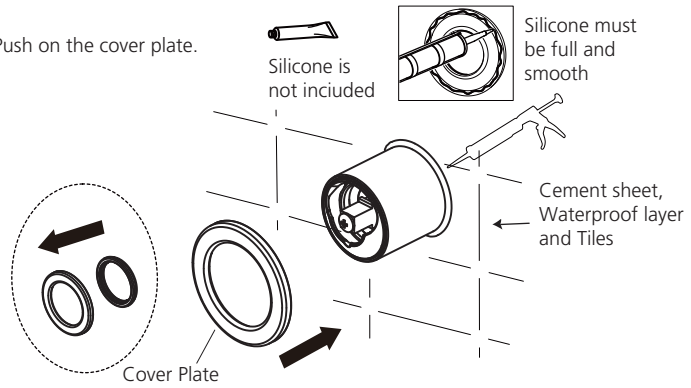

5

Push on the mixer handle and tighten with the grub screw.

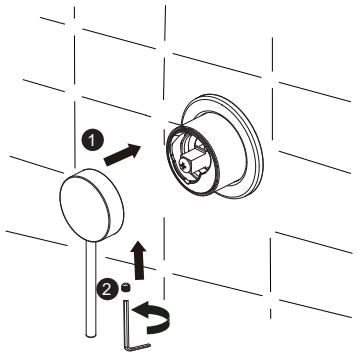



Fit the Sleeve

Fit the Dome



Lock Nut,
with Splines

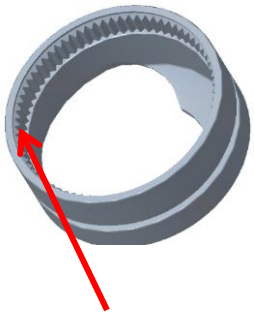

Dome,
with Splines

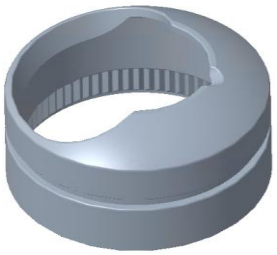

Both the lock nut and dome are designed with splines.
Align the splines of the dome with those of the lock nut during installation.

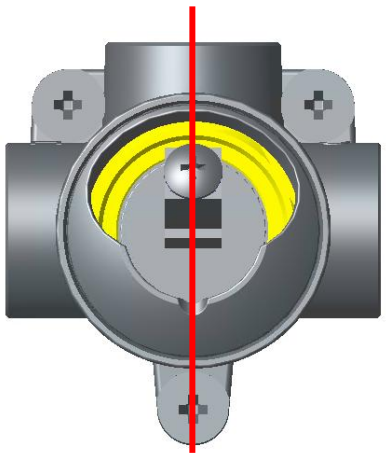

Center Alignment

1. Please follow the diagram above when installing the dome. Please pay attention to the orientation of the cartridge stem.
2. Apply silicone grease or other lubricants to the O-ring on the dome before assembly.
3. Match the splines on the dome to the spindles of the cartridge lock nut. Fully press the dome down after proper alignment.